Fashion Institute of Technology

Seventh Avenue at 27 Street
New York City 10001-5992
www.fitnyc.edu

Purchasing Department
227 West 27th Street
New York, NY 10001
Purchasing Dept. Tel. 212-217-3630
Purchasing Dept. Fax 212-217-3631
Purchasing@fitnyc.edu

NOTICE TO ALL FIRMS

Date: June 20, 2025

To: All Prospective Bidders

From: Sam Li
Director of Procurement Services

Re: Addendum Number 2
IFB # C1585R – Pomerantz New Fire Alarm System – Rebid

Questions

Q1. According to the specifications for the Duralife RHH cables, the attached charts shows the conduit fill which states 1-4 #3/0 conduits are to be in a 3"C, please note that the conduit size on drawing E-601 will not hold the Duralife conductors due to the insulation on the conductors, so the conduit size must increase. Please advise.

SPECIFICATIONS

DuraLife® RHH/R90 Two-Hour Fire-Rated Power Cables

HARDWARE & ACCESSORIES CERTIFIED: (Refer to DuraLife® II Installation Instructions for details)

- EMT/Conduit: Wheatland/Western Tube; Set-Screw Coupling & Fittings: Hubbell Raco
- Phenolic Conduit: Conduit & Couplings: Champion Fiberglass; Conduit clamps: Erico
- Pull Boxes - NEMA 1: Eaton/Cooper; Type 4X: Nvent/Hoffman
- Pulling Lubricant - Polywater LZ

2020 NFPA 70® Table 310.16

Radix DuraLife® Power Cables

DuraLife Part Number	Conductor Size	Conductor Strands	Overall Diameter	Insulation System Thickness	Approx. Weight (lbs/1,000')	Ampacity 75°C (amps)	Ampacity 90°C (amps)	Horizontal / Vertical Installation - EMT Raceway: Number of Conductors 1 to 4	Horizontal / Vertical Installation - EMT Raceway: Number of Conductors 5	Horizontal Installation - Champion Flame Shield Phenolic Conduit Type XW: Number of Conductors 1 to 4	Horizontal Installation - Champion Flame Shield Phenolic Conduit Type XW: Number of Conductors 5	Vertical Installation - Champion Flame Shield Phenolic Conduit Type XW: Number of Conductors 1 to 4	Vertical Installation - Champion Flame Shield Phenolic Conduit Type XW: Number of Conductors 5
RH14A007	14 awg	7	.195"	45 mils	29	20	25	1"	1 ¼"	1"	1 ¼"	1"	1 ¼"
RH12A007	12 awg	7	.220"	45 mils	38	25	30	1 ¼"	1 ¼"	1 ¼"	1 ¼"	1"	1 ¼"
RH10A007	10 awg	7	.250"	45 mils	54	35	40	1 ¼"	1 ½"	1 ¼"	1 ¼"	1"	1 ¼"
RH08A007	8 awg	7	.310"	60 mils	84	50	55	1 ¼"	1 ½"	1 ¼"	1 ½"	1"	1 ¼"
RH06A007	6 awg	7	.380"	75 mils	131	65	75	1 ½"	2"	1 ½"	2"	1 ¼"	1 ½"
RH04A007	4 awg	7	.420"	75 mils	186	85	95	2"	2 ½"	2"	2 ½"	1 ¼"	1 ½"
RH03A007	3 awg	7	.450"	75 mils	225	100	115	2"	2 ½"	2 ½"	2 ½"	1 ¼"	2"
RH02A007	2 awg	7	.480"	75 mils	270	115	130	2"	2 ½"	2 ½"	3"	1 ½"	2"
RH01A019	1 awg	19	.560"	100 mils	365	130	145	2 ½"	3"	2 ½"	3"	2 ½"	3"
RHX1A019	1/0	19	.600"	100 mils	443	150	170	2 ½"	3"	2 ½"	3"	2 ½"	3"
RHX2A019	2/0	19	.650"	100 mils	537	175	195	2 ½"	3"	2 ½"	3"	2 ½"	3"
RHX3A019	3/0	19	.700"	100 mils	658	200	225	3"	3 ½"	3"	3 ½"	3"	3 ½"
RHX4A019	4/0	19	.760"	100 mils	806	230	260	3"	3 ½"	3"	3 ½"	3"	3 ½"
RH250A037	250 MCM	37	.865"	130 mils	991	255	290	3 ½"	4"	3"	3 ½"	3"	4"
RH300A037*	300 MCM	37	.920"	130 mils	1165	285	320	4"	4"	3 ½"	4"	3 ½"	4"***
RH350A037	350 MCM	37	.970"	130 mils	1306	310	350	4"	4"	3 ½"	4"	3 ½"	4"***
RH400A037*	400 MCM	37	1.020"	130 mils	1672	335	380	4"	X	4"	X	4"	X
RH500A037	500 MCM	37	1.105"	130 mils	1825	380	430	4"	X	4"	X	4"	X

See manufacturer's instructions for additional options and detailed conduit fill by awg size, orientation, conduit type. Must follow UL Electrical Circuit Protective System (FHIT/7) #28E and all provisions of the National Electrical Code (NFPA 70). Ampacity based on three current

A1. A 3-inch EMT shall be used as suggested by the RFI. Refer to the updated drawing sheet E-601.00 (attached).

Q2. I am working on getting everything together for the bid for the FIT – Pomerantz Center New Fire Alarm System Rebid (Alt) Project. If possible, please confirm the following:

(a) There are no Liquidated Damages.
(b) There is no Bid Bond Form.
(c) The Bid Packet must be emailed to this email address by 12:00 Noon on Thursday, June 26, 2025. It cannot be dropped off or mailed. The only portion of the bid that can be dropped off or mailed is the Bid Security (if there is one).

A2a. There are no liquidated damages.

A2b. We don't provide bid bond forms, it's something that you'll need to get from your bonding company. Each bonding company might use a different form. In the past, some bidders submitted a Document A310 with their bid from their bonding company.

A2c. Yes, the bid package must be emailed to purchasingbids@fitnyc.edu on or before 12:00pm on June 26, 2025. The emailed bid package must contain an image of the bid security (certified check of 2% or bid bond of 10% of your total bid price). The original copy of the bid security can be dropped of at 333 7th Ave. 16th Fl, New York, NY 10001, or mailed to 227 West 27th St. New York, NY 10001.

THIS ADDENDUM IS PART OF THE CONTRACT DOCUMENT AND SHALL BE INCLUDED WITH YOUR BID SUBMITTAL. YOUR SIGNATURE BELOW WARRANTS THAT YOU UNDERSTAND THIS ADDENDUM AND THAT YOU HAVE MADE THE APPRORIATE ADJUSTMENTS IN YOUR BID AND CALCULATIONS.

_____
Signature

_____
Print Name and Title of Authorized Representative

_____
Print Name of Company/Partnership/Individual

_____
Date

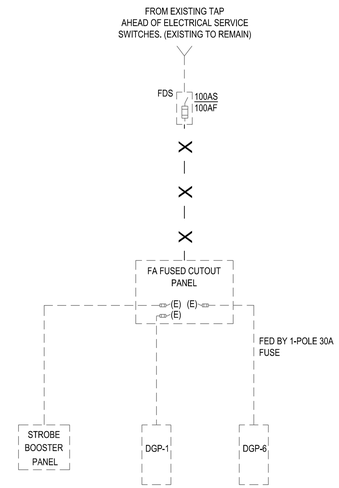

1 ELECTRICAL DEMOLITION ONE-LINE DIAGRAM
N.T.S

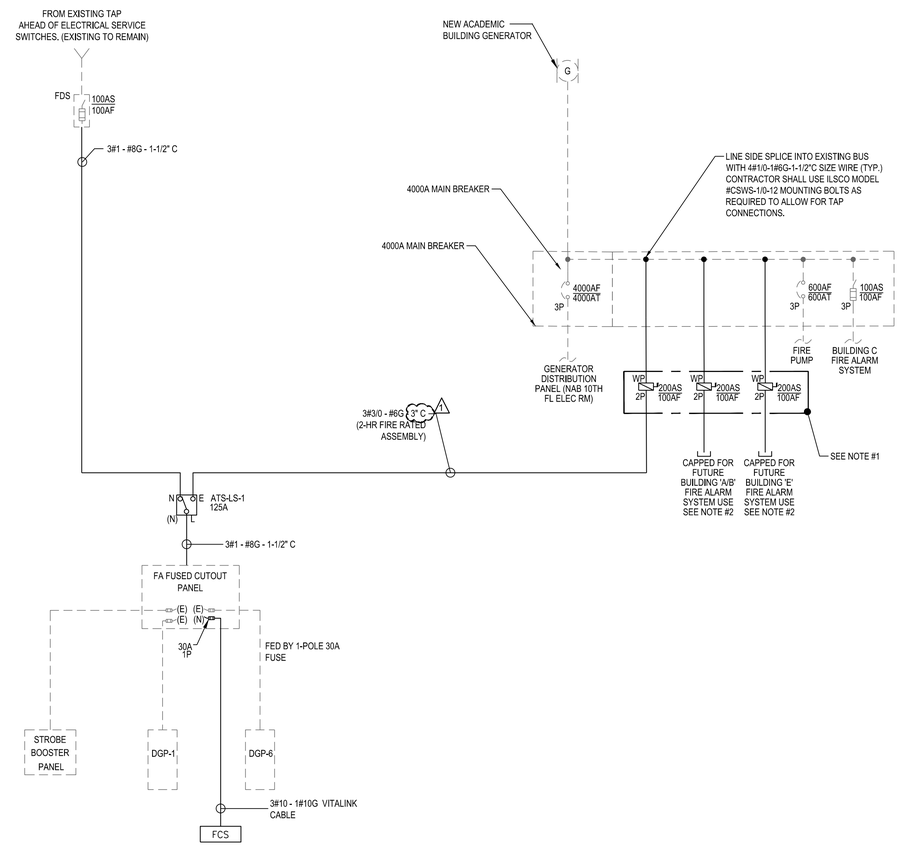

NOTES:

1. NEW FIRE ALARM DISCONNECT SWITCHES SHALL BE RED AND LOCKABLE IN THE "ON" POSITION.
2. FOR FUTURE USE. CAP THE CONDUIT AND WIRING FROM EACH SWITCH IN THE 10TH FLOOR AT THE CEILING. SEE E-200 SERIES FOR ADDITIONAL INFO (TYP)

2 NEW CONSTRUCTION ELECTRICAL ONE-LINE DIAGRAM
N.T.S

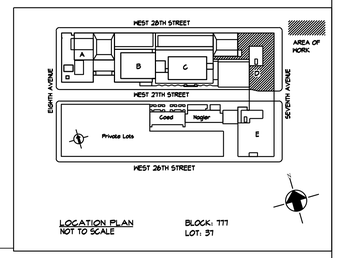

LOCATION PLAN
NOT TO SCALE

BLOCK: 777
LOT: 37

NO.	DATE	REVISION
2	06/19/2025	ADDENDUM #3
1	06/02/2025	ISSUED FOR BID

MEP Consultants
MG Engineering D.P.C.
116 West 32nd Street,
New York, NY, 10001

Environmental Consultants
EPM, Inc.
1983 Marcus Ave. Suite 109
Lake Sucess, NY 11042 / (516) 328-1194

Fashion Institute of Technology
227 West 27th Street
New York, NY 10001

David Smotrich & Partners LLP
Architects/Planers
443 Park Avenue South New York, NY 10016
212 889 4045 Fax 212 889 3672

PROJECT: POMERANTZ DESIGN CENTER
FIRE ALARM SYSTEM
300 7TH AVENUE NEW YORK, NY, 10001

DRAWING TITLE:
ELECTRICAL
ONE-LINE DIAGRAMS

SEAL & SIGNATURE:

DATE:	06.02.2025
PROJECT No:	8969.74
DRAWING BY:	DG
CHK BY:	CTD
SCALE:	N.T.S
DWG No:	E-601.00
CADD FILE:	DOB page: 4 OF 7

NEW YORK CITY BUILDING DEPARTMENT APPROVAL NOTE

THIS PLAN IS APPROVED ONLY FOR WORK INDICATED ON THE APPLICATION SPECIFICATION SHEET. ALL OTHER MATTERS SHOWN ARE NOT TO BE RELIED UPON, OR TO BE CONSIDERED AS EITHER BEING APPROVED OR IN ACCORDANCE WITH APPLICABLE CODES.

NEW YORK CITY ENERGY CONSERVATION CODE

TO THE BEST OF MY KNOWLEDGE, BELIEF AND PROFESSIONAL JUDGMENT, THESE PLANS AND SPECIFICATIONS ARE IN COMPLIANCE WITH THE 2020 NEW YORK CITY ENERGY CONSERVATION CODE.

MGE
MG Engineering D.P.C. / we engineer success
116 West 32nd Street, 12th Floor, New York, N.Y. 10001
P 212.643.9055
www.mgedpc.net